Aluminium glass sliding door

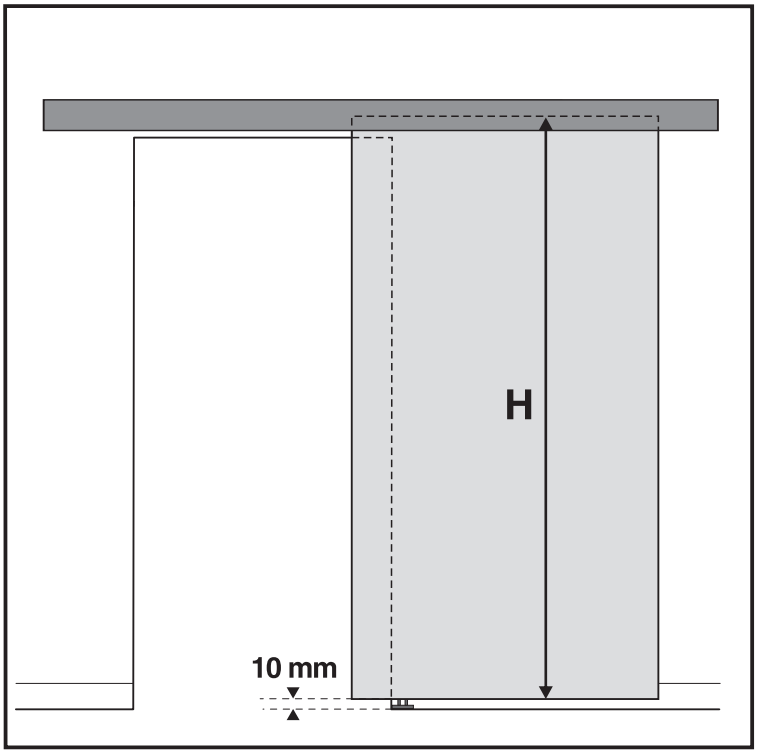

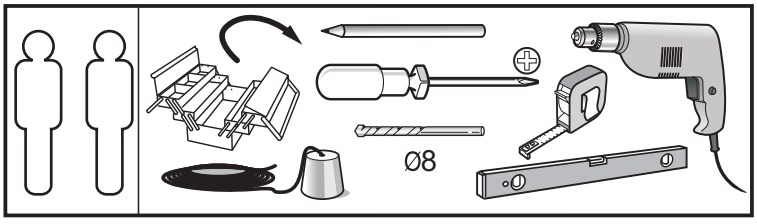

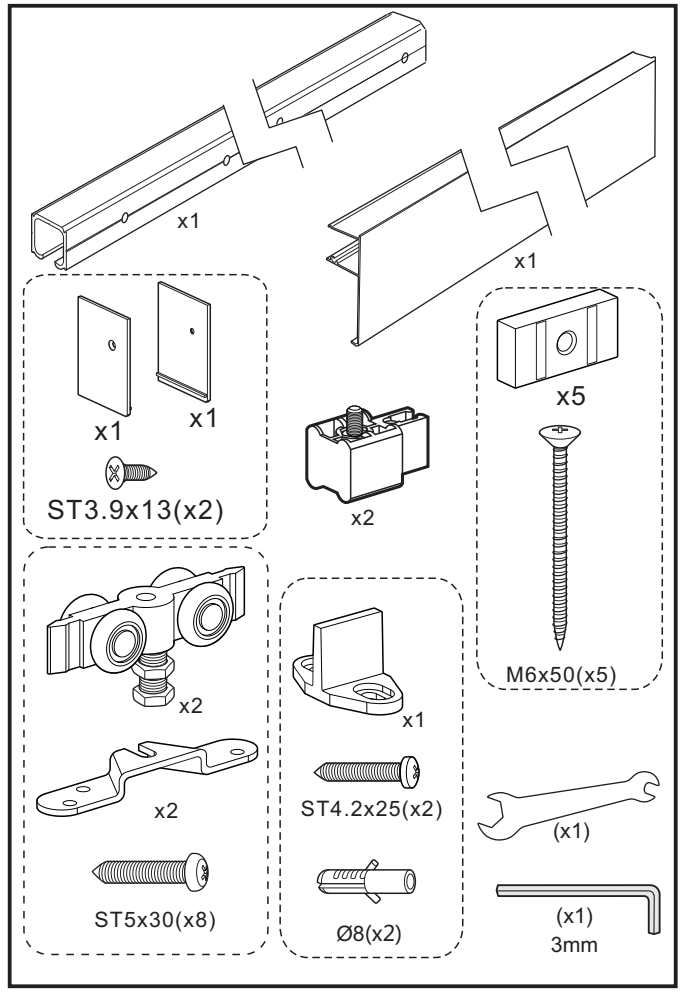

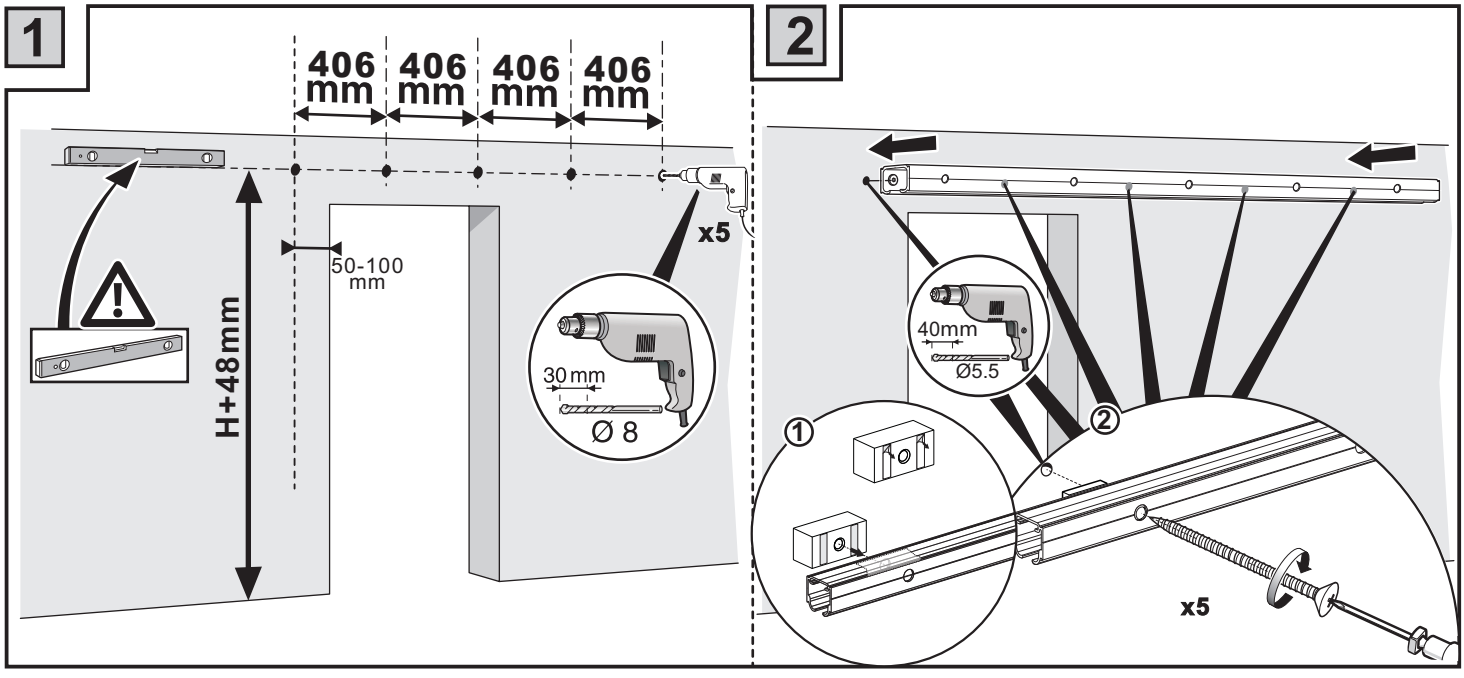

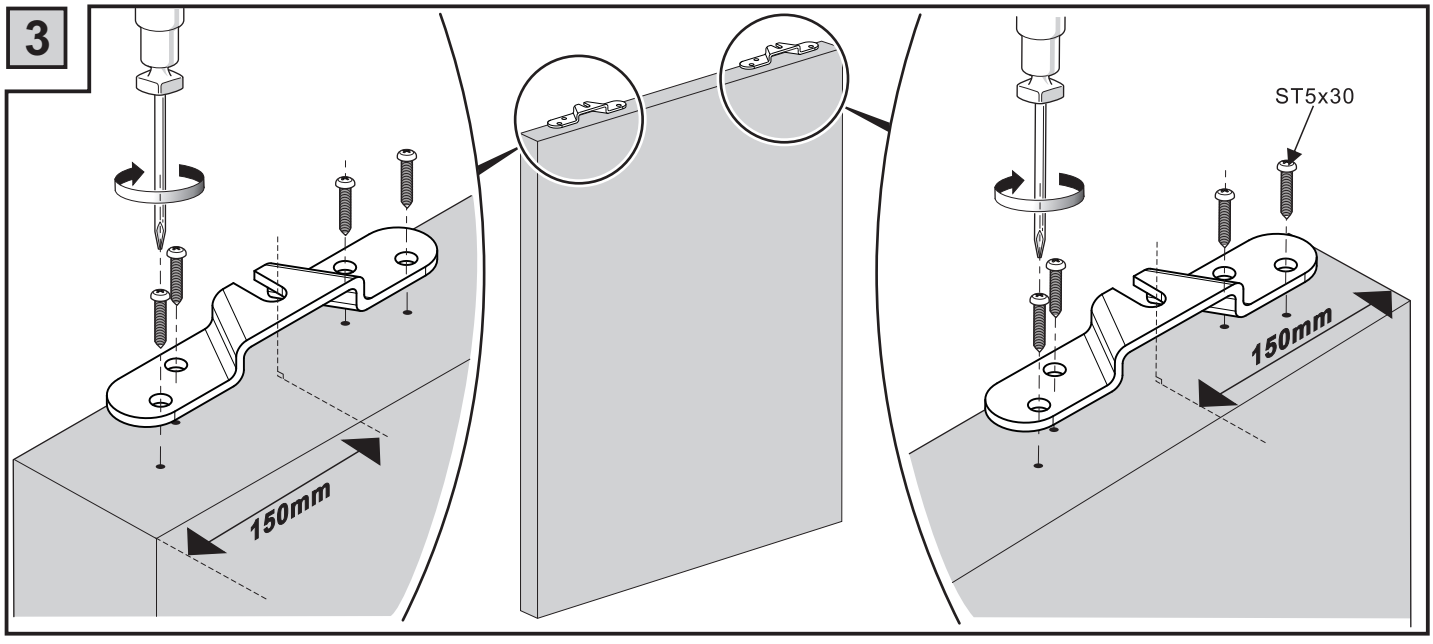
3
ST5x30
150mm
150mm

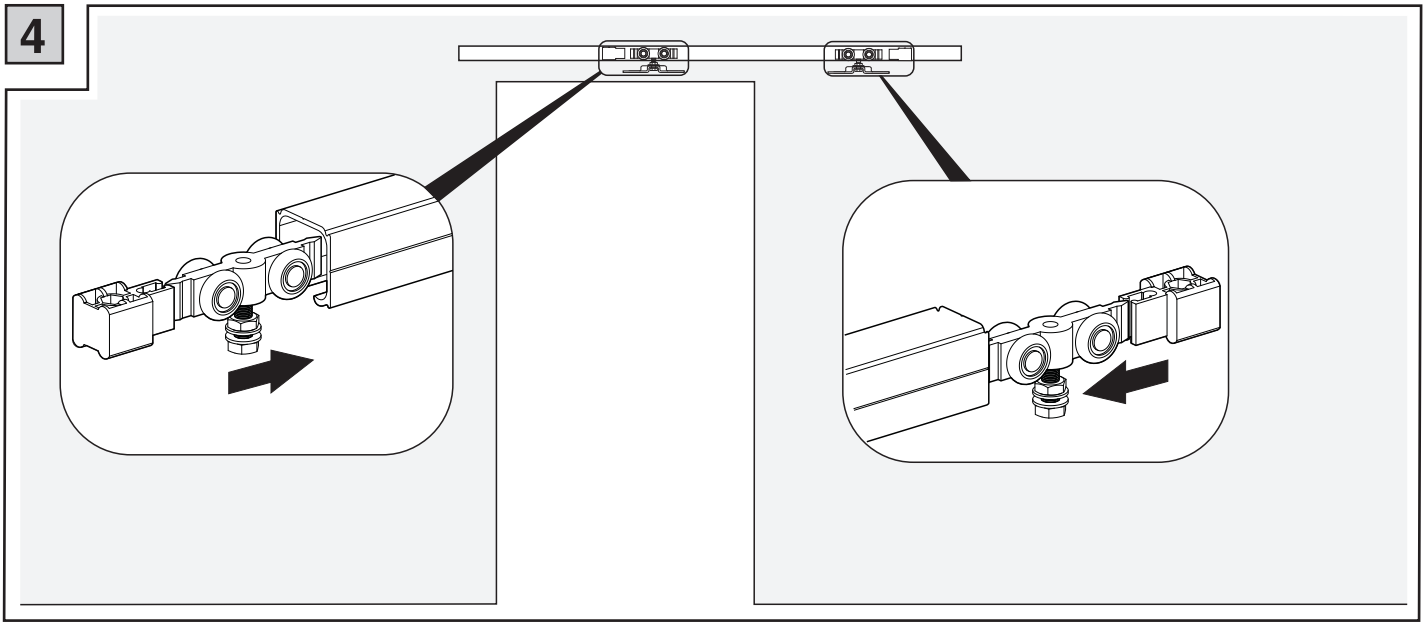
4

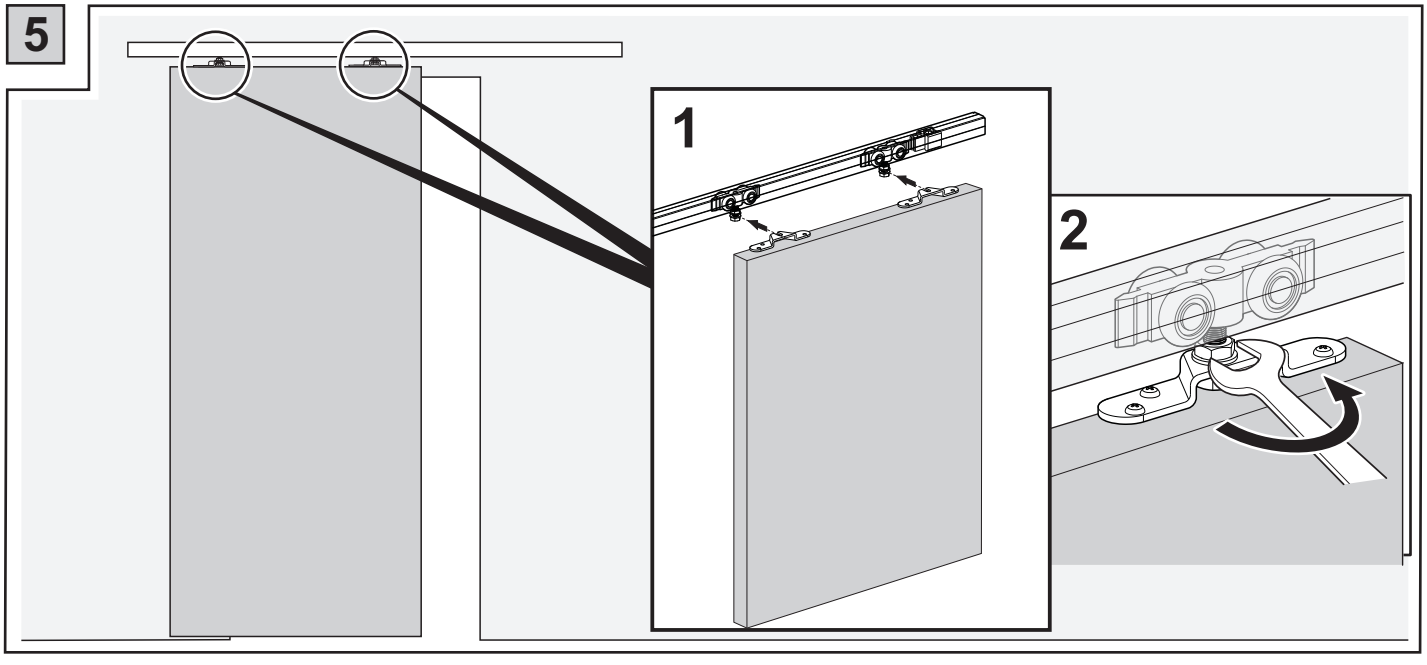
5
1
2

6

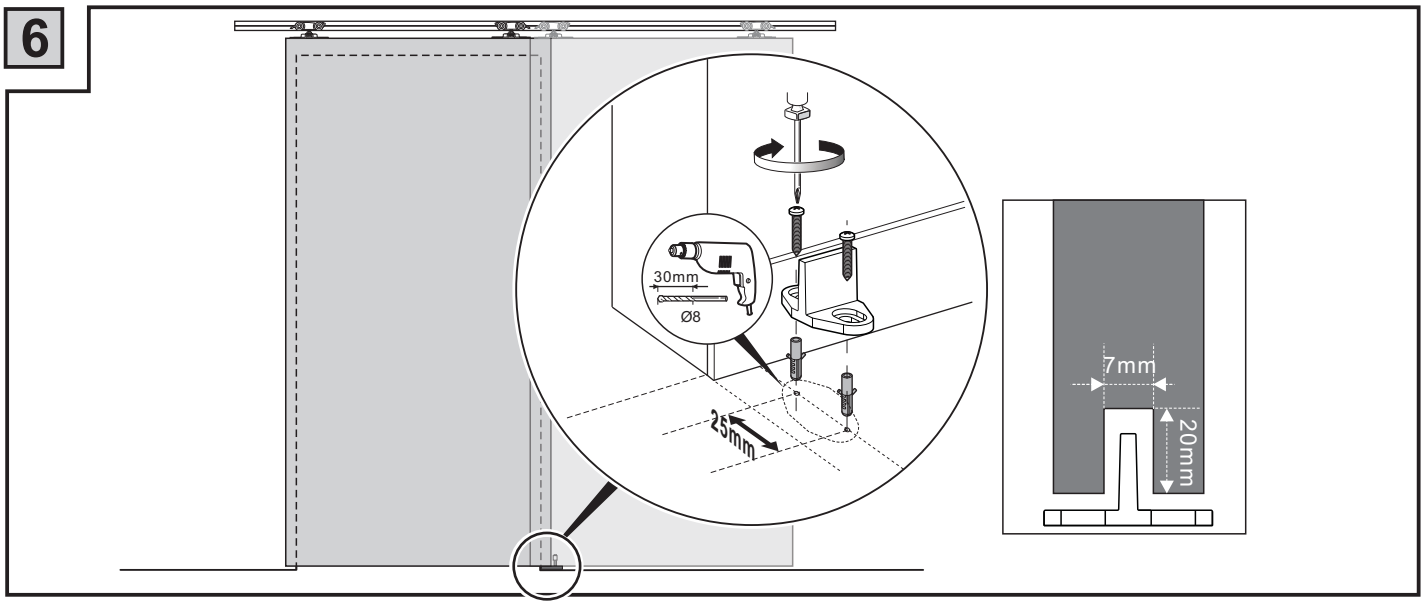

7

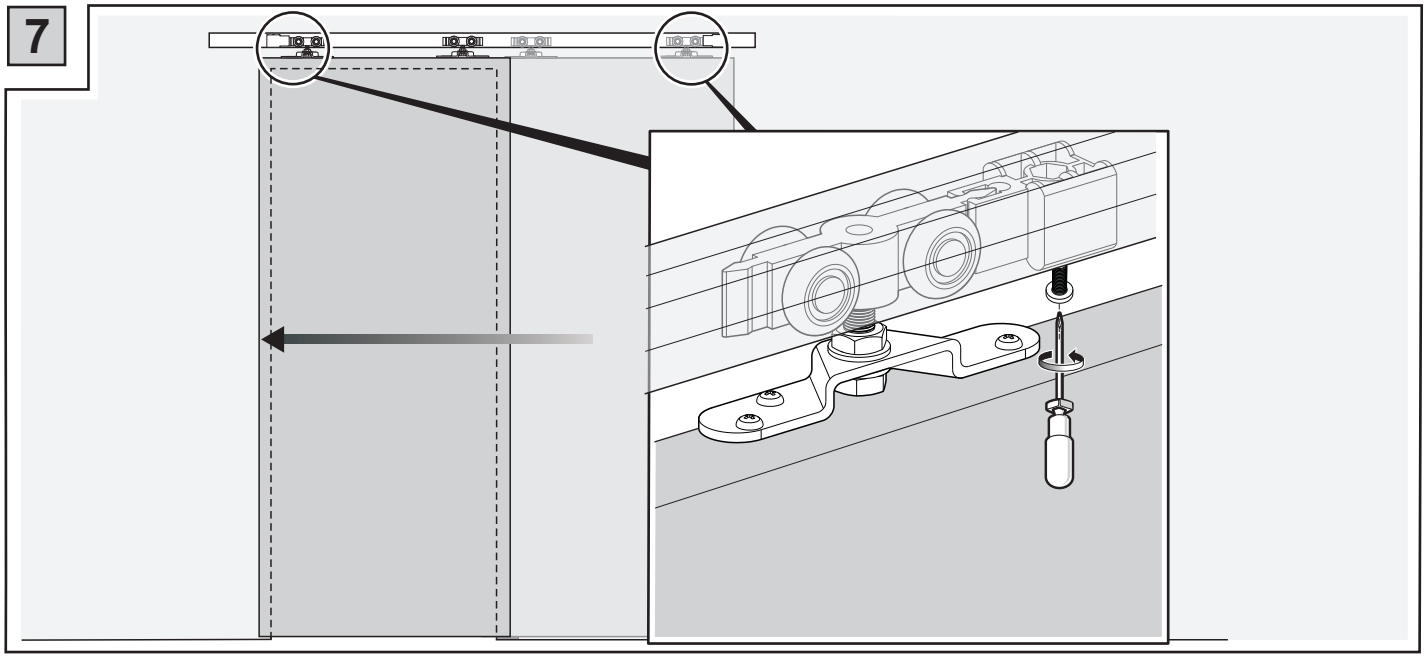
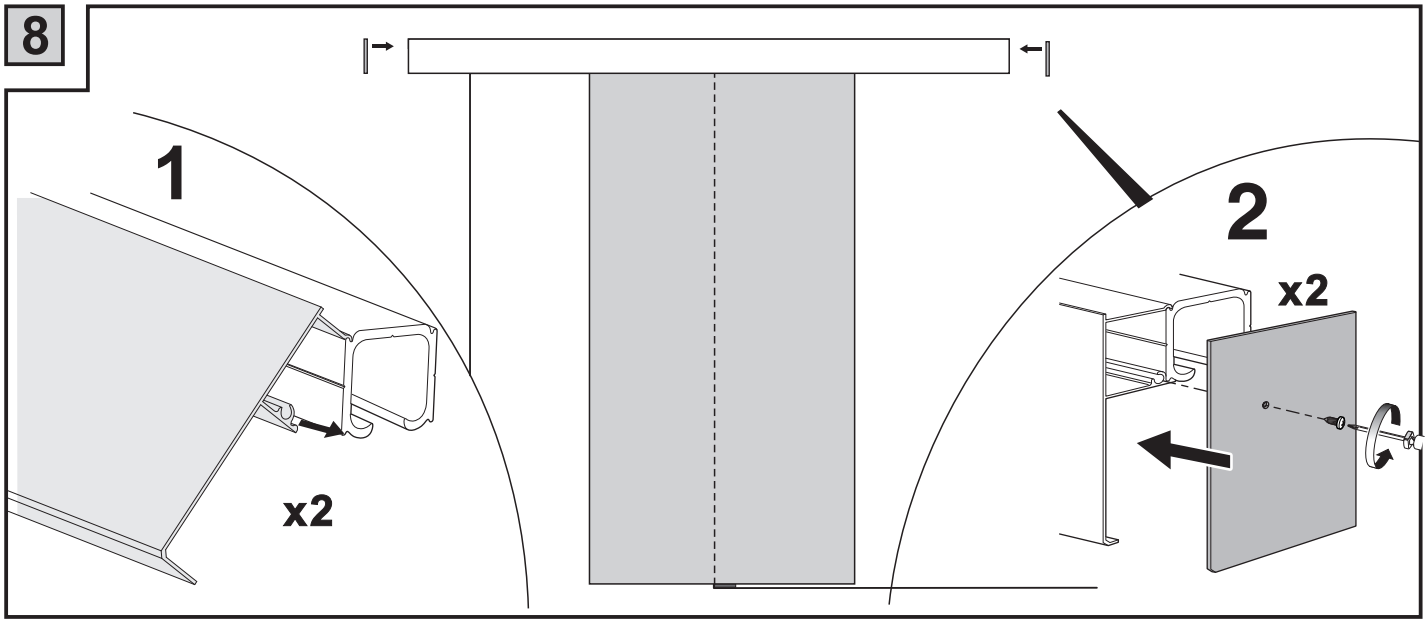
8